Technical specifications

	MicroLed Plus	Flasher
Power supply voltage:	Multivoltage (10-30V)	Multivoltage (10-30V)
Operating temperature:	-20º / +50º	-20º / +50º
Average consumed:	1,6 A to 12V / 0,8 A to 24V (flash mode)	0,6 A to 12V / 0,3 A to 24V
Average consumed (cruiser):	0,05 A to 12/24V	
LED Colours:	Blue / amber / red/ white	
Type of LEDs:	Sputnik	
Lenses colours:	Blue / ambar / red / clear	
Light dimensions:	138 x 51 x 21 mm	
Synchronization: MLP-F4		4 lights Microled Plus
Synchronization: MLP-F8		8 lights Microled Plus

HOW TO ORDER

MICROLED PLUS

1. Select the MicroLed Plus light reference number from next list:

Horizontal Installation

2010427	MicroLed Plus, blue light, blue smooth lens, multivoltage
2010419	MicroLed Plus, blue light, blue spreader lens, R-65, multivoltage
2010428	MicroLed Plus, blue light, clear smooth lens, multivoltage
2010420	Microled Plus, blue, clear spreader lens, R-65, multivoltage
2010425	MicroLed Plus, white light, amber smooth lens, multivoltage
2010421	MicroLed Plus, white light, amber spreader lens, R-65, multivoltage
2010426	MicroLed Plus, amber light, clear smooth lens, multivoltage
2010422	MicroLed Plus, amber light, clear spreader lens, multivoltage
2010429	MicroLed Plus, red light, red smooth lens, multivoltage
2010423	MicroLed Plus, red light, red spreader lens, multivoltage
2010430	MicroLed Plus, red light, clear smooth lens, multivoltage
2010424	MicroLed Plus, red light, clear spreader lens, multivoltage
2010520	MicroLed Plus interior or scene light, white light, clear spreader lens, multivoltage
2010521	MicroLed Plus interior or scene light, white light, clear smooth lens, multivoltage

Vertical Installation

2010433	MicroLed Plus-V, blue light, blue spreader lens, R-65 Vertical, multivoltage
2010434	MicroLed Plus-V, blue light, clear spreader lens, R-65 Vertical, multivoltage
2010431	MicroLed Plus-V, white light, amber spreader lens, Vertical, R-65 multivoltage
2010432	MicroLed Plus-V, amber light, clear spreader lens, Vertical, multivoltage
2010435	MicroLed Plus-V, red light, red spreader lens, Vertical, multivoltage
2010436	MicroLed Plus-V, red light, clear spreader lens, Vertical, multivoltage

2. Select the mounting kit reference from next list:

2010437	MLP-SUP, MicroLed Plus surface mounting
2010438	MLP-EMP, MicroLed Plus flush mounting

3. Select the flasher reference from next list:

2006035	MLP-F4, Flasher, 4 MicroLed Plus lights, multivoltage
2006030	MLP-F8, Flasher, 8 MicroLed Plus lights, multivoltage

MICROLED PLUS R65 CLASS 2

1. Select the MicroLed Plus R65 Class 2 and flasher reference number from next list:

Horizontal Installation

2010511	MicroLed Plus CL2, blue light, blue spreader lens, R65 class 2, multivoltage
2010512	MicroLed Plus CL2, blue light, clear spreader lens, R65 class 2, multivoltage

Flasher R65 Class 2

2006031	MLP-F8 CL2, Flasher, 8 MicroLed Plus CL2 lights, multivoltage

2. Select the mounting kit reference from next list:

2010437	MLP-SUP, MicroLed Plus surface mounting
2010438	MLP-EMP, MicroLed Plus flush mounting

P10550104gb 05/2014

www.fedsigvama.com

FEDERAL SIGNAL VAMA
Protecting people and our planet
ISO 9001:2008 Certified Company
Dr. Ferrán, 7
08339 VILASSAR DE DALT
BARCELONA - SPAIN
Phone 34 93 741 79 00
Fax 34 93 750 78 23
Email: marketing@vama.es

FEDERAL SIGNAL VAMA
Protecting people and our planet

MicroLed Plus+

Sputnik inside

Exceptionally bright ultra-compact Led light

MicroLed Plus

Sputnik inside

Federal Signal Vama Presents **MicroLed Plus** a ultra-compact high intensity LED light inspired on Microled Sputnik. Its new design incorporates the latest technological advances and provides improved high-luminosity, thus complying the European regulation R65, category X.

MicroLed Plus is an ultra-compact high-power LED warning light. Its dimensions of 138 x 51 x only 21 mm of depth turns it to the flattest light in the market by facilitating the installation on any surface.

MicroLed Plus provides greater versatility as other products on the strength of no integrated flasher. It permits the connection to other Federal Signal Vama Products, like SMC (SignalMaster function), ICS controllers or external flashers like the Intelli-Flasher, etc.

Jointed to the external flasher MLP-F4/MLP-F8, MicroLed Plus complies with the European Regulation R65.

MicroLed Plus incorporates four latest-generation with advanced design, high intensity and reduced consumption Sputnik LED diodes with blue, amber or red light.

MicroLed Plus is also available for vertical mount, approved by the European regulation R65.

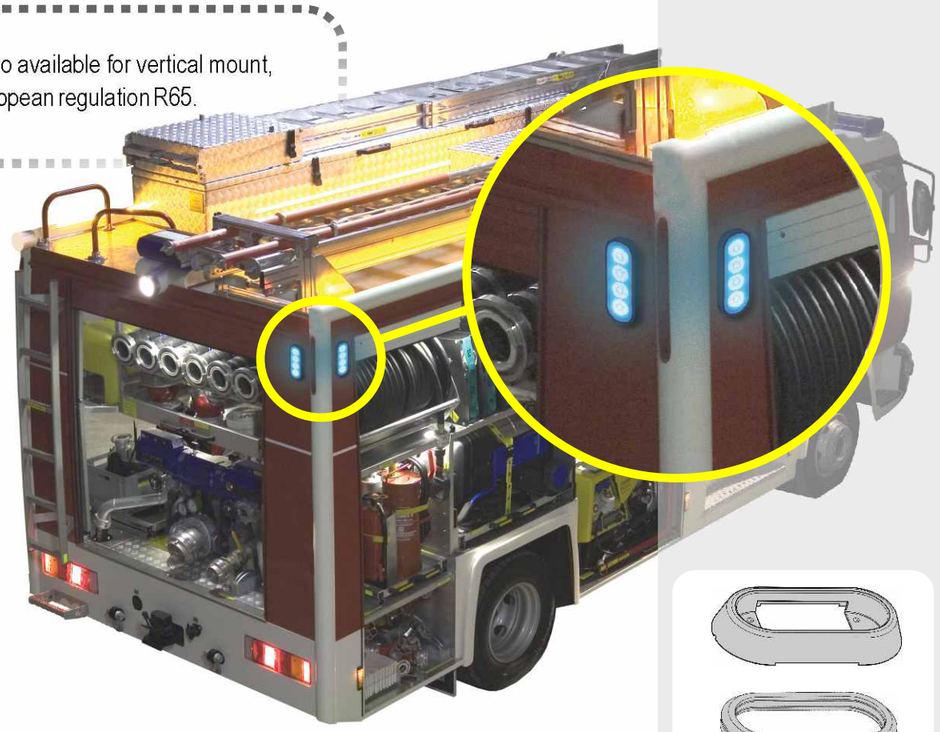

Available with blue, amber, red and clear lenses, for uses on undercover vehicles. Lenses are smooth or spreader.

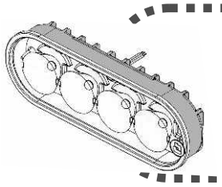

Plastic housing with heat sink function and high-strength injected lens of polycarbonate.

MicroLED Plus CL2 comply the European regulation R65, "X" category and class 2 (day/night selection).

Just one external flasher allows controlling and connecting up to 4/8 MicroLed Plus warning lights. Selectable are different combinations of eight flash modes, including the R65 mode, and it permits the independent control of two channels.

As internal as external installation for perimeter and secondary warning of police vehicles and motorcycles, ambulances, medical services, firetrucks, rescue and other emergency vehicles.

Multivoltage power sources (10 - 30 V) which provides grater versatility to the kit.

MicroLed Plus and flasher dimensions (mm).

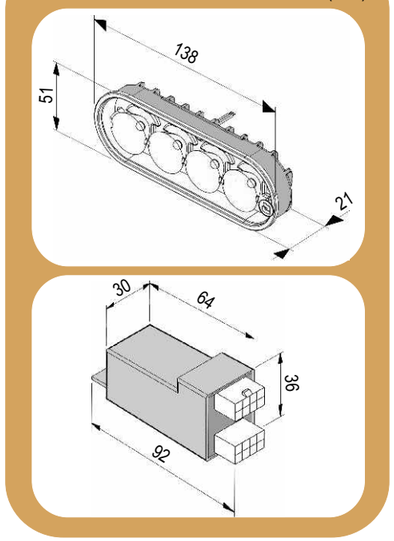

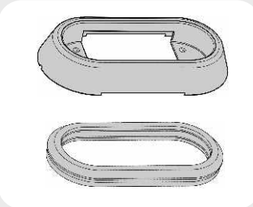

Two mounting kits: Surface or flush

MicroLed Plus. Spreader lens

MicroLed Plus. Flush mounting

MicroLed Plus. Surface mounting